Retrieval Augmentation Generation (RAG)

With Advanced Chunking and Multi-Tier Caching

Advanced RAG Architecture:

I. Ingestion Pipeline (Data Preparation & Indexing)

The goal is to prepare data for precise retrieval while keeping the original context intact for the LLM.

1. **Data Ingestion & Extraction:** Raw documents (PDFs, docs, HTML) are ingested and converted into clean text.
2. **Parent-Child Chunking:**
    - **Parent Chunks:** The text is split into large, coherent chunks (e.g., 1000–2000 tokens) to maintain context.
    - **Child Chunks:** Each parent chunk is further subdivided into smaller, semantically dense child chunks (e.g., 128–512 tokens).
3. **Embedding Generation:** Only the *child* chunks are embedded into vectors using an embedding model.
4. **Vector/KV Storage:**
    - **Vector DB (Pinecone):** Stores Child Chunk Vectors + ID mappings to parent.
    - **Key-Value Store (Redis):** Stores the full Parent Chunk text (indexed by ID).

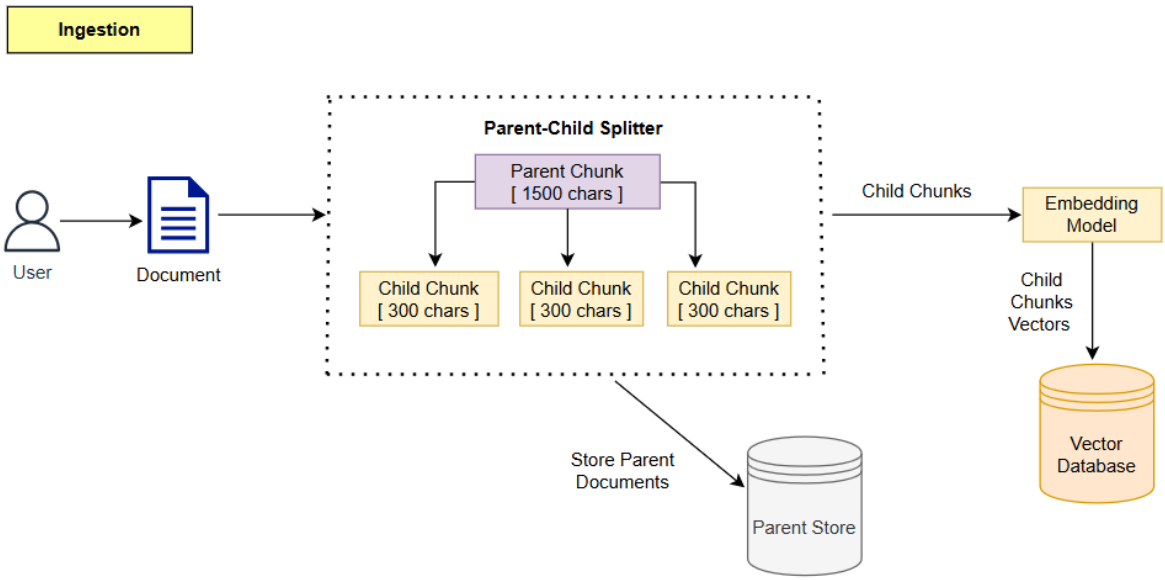

II. Retrieval Pipeline (Query & Context Fetching)

1. **Query Input:** User provides a natural language query.
2. **Semantic Search (Child Level):** The query is embedded, and the vector DB returns the top-most relevant *child* chunks.
3. **Parent Retrieval (Parent Level):** Using the IDs from the child chunks, the system fetches the larger *parent* chunks from the Key-Value store.
4. **Re-ranking (Optional but recommended):** A cross-encoder re-ranks the fetched parent chunks to ensure the most relevant content is on top.
5. **Context Assembly:** The top ranked, context-rich parent chunks are passed to the Generation component.

III. Generation Pipeline (Response Generation)

1. **System Prompt + Context:** The LLM receives the prompt, specialized instructions, and the retrieved parent chunks.
2. **Grounded Generation:** The LLM generates a response, minimizing hallucinations by relying on the provided context.

IV. 3-Tier Caching Strategy

To optimize for speed and cost, three levels of caching are applied:

- **Tier 1: Semantic Cache (Query Level - Redis)**
  - *Purpose:* Identifies if the exact or semantically similar query has been asked before.
  - *Mechanism:* Embeds incoming query, checks vector similarity against cached queries. If match (>95%), returns cached answer immediately.
- **Tier 2: Retrieval Cache (Context Level - Redis)**
  - *Purpose:* Stores the results of top-retrieved chunks for common questions.
  - *Mechanism:* If Tier 1 misses, check if the document segments for this topic are already retrieved and cached.
- **Tier 3: Embedding Cache (Offline/Ingestion Level)**
  - *Purpose:* Avoids re-computing embeddings for identical text segments.
  - *Mechanism:* Caches the mapping of text chunks to their vector representations during the ingestion phase.

Redis is a superior choice for a multi-tier Retrieval-Augmented Generation (RAG) cache due to its **in-memory performance**, advanced **semantic caching** capabilities (which traditional caches lack), and its ability to consolidate various RAG requirements into a **single, unified platform**.

Key Advantages of Redis for RAG Caching

- **Exceptional Performance and Low Latency**: Redis stores data entirely in RAM, resulting in sub-millisecond latency for read/write operations, which is significantly faster than disk-based databases or caches that may involve disk I/O bottlenecks. This speed is crucial for meeting the "100ms rule" for a seamless user experience in real-time RAG applications.
- **Semantic Caching for Efficiency**: Unlike traditional caches that only match exact queries, Redis supports semantic caching using vector search. This allows it to recognize and return cached responses for semantically similar questions, drastically reducing the number of expensive calls to the Large Language Model (LLM) API and cutting costs by up to 68.8% in some workloads.
- **Unified Platform for Diverse Needs**: Redis can manage multiple components of a RAG system within a single infrastructure, reducing complexity and operational overhead. It handles:
    - **Vector Search**: Functions as a high-speed vector database for retrieving relevant context.
    - **LLM Memory Management**: Manages both short-term conversational context and long-term user preferences, ensuring continuity and personalization across interactions.
    - **Pub/Sub Messaging**: Facilitates real-time coordination and event-driven communication among different agents or microservices in complex AI workflows.
- **Scalability and High Availability**: Redis is designed for distributed caching and horizontal scaling through clustering and replication, allowing it to handle large data volumes and high traffic loads efficiently without compromising performance.
- **Flexible Data Structures**: It supports a wide variety of data structures (strings, hashes, lists, sets, sorted sets, etc.), which provides developers with the flexibility to implement complex caching strategies and manage different data types more efficiently than simpler key-value stores like Memcached.
- **Persistence Options**: While in-memory, Redis offers persistence options (snapshotting and append-only files) to ensure data durability, balancing performance needs with data safety requirements.

In a multi-tier RAG architecture, these features make Redis the ideal high-speed, versatile, and scalable solution for managing the demands of modern AI applications.

V. Summary of Benefits

- **Accuracy:** Parent-child ensures the LLM gets full context (parent) while maintaining high-precision search (child).
- **Latency:** 3-tier caching, particularly semantic caching, skips the embedding and retrieval steps for known questions.
- **Cost:** Reduced calls to embedding models and LLMs due to caching.

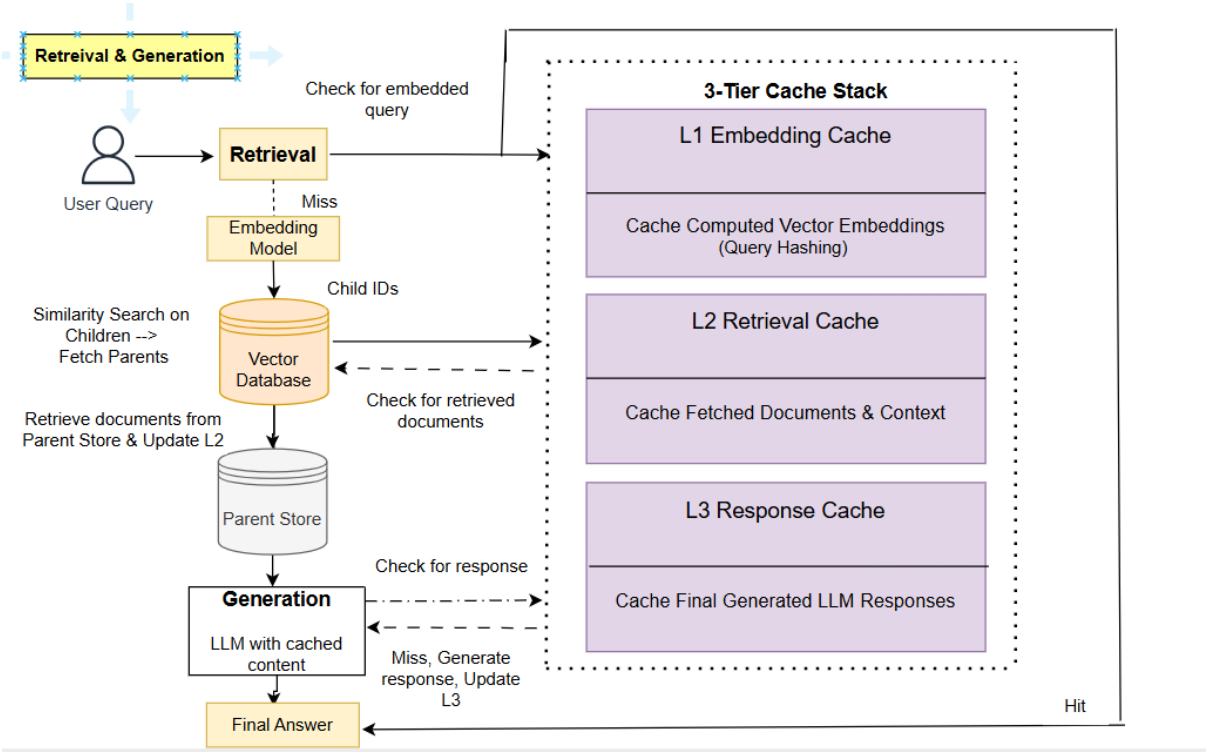

An alternative to Parent-Child chunking can be Embedding based ***Semantic chunking***.

Uses embedding similarity to detect topic shifts and place chunk boundaries at semantically meaningful points.

<u>Algorithm:</u>

1. Split the document into individual sentences.
2. Create embeddings for each sentence.

3. Compute cosine similarity between consecutive sentence embeddings.
4. Where similarity drops sharply (topic shift), insert a chunk boundary.

PROS:

- Chunks align with actual topic boundaries, not arbitrary character counts
- Produces highly coherent, self-contained chunks
- Adapts to the content: short sections for dense topics, long sections for flowing narratives
- Significantly improves retrieval quality for documents with multiple topics
- Breakpoint threshold is a tunable parameter for different granularity levels

CONS:

- Requires embedding every individual sentence BEFORE producing chunks (expensive)
- For 100k sentences, that's 100k embedding API calls just for chunking
- Inconsistent benefits — sometimes not worth the computational cost (per 2024 research)
- Sensitive to breakpoint threshold: too low = one giant chunk, too high = sentence-per-chunk
- Sentence segmentation errors propagate into bad chunk boundaries
- Significantly slower than rule-based approaches

Semantic chunking splits documents based on **semantic shifts in meaning**, detected using **embedding similarity between sentences or paragraphs**.

Instead of splitting purely by size (tokens/characters), it identifies **natural conceptual boundaries**.

The document is first split into **sentences or paragraphs**, then embeddings are generated for each segment.

A **similarity score** between adjacent segments is computed.

If similarity drops below a threshold, a **new chunk boundary is created**.

Example

Document:

Paragraph 1 – Apple's Q4 financial performance.

Paragraph 2 – Details of revenue growth.

Paragraph 3 – Explanation of product categories.

Paragraph 4 – Discussion of supply chain strategy.

Semantic chunking may produce:

Chunk 1:
Paragraph 1 + Paragraph 2
(financial results topic)

Chunk 2:
Paragraph 3
(product breakdown topic)

Chunk 3:
Paragraph 4
(supply chain discussion)

Instead of arbitrary token boundaries.

Architecture of Semantic Chunking

Document
|
▼
Sentence / Paragraph Split
|
▼
Embedding Generation
|
▼
Similarity Calculation
|
▼
Boundary Detection
|
▼
Semantic Chunks

Advantages Over Other Chunking Strategies

<u>Preserves Semantic Coherence</u>

Unlike fixed-size chunking, semantic chunking keeps complete ideas together.

Example:

Bad chunk (token split):

Chunk 1:
Apple reported Q4 revenue of...

Chunk 2:
...$94.9 billion with strong iPhone sales

Semantic chunk:

Apple reported Q4 revenue of $94.9 billion with strong iPhone sales.

Better retrieval accuracy.

Improves Retrieval Precision

Vector databases retrieve concepts, not tokens.

Semantic chunks align with concepts, improving similarity search.

Result:

- fewer irrelevant matches
- higher recall
- better reranking performance

Reduces Context Fragmentation

Token chunking often splits:

- explanations
- tables
- reasoning chains

Semantic chunking keeps them intact. This improves **LLM reasoning quality**.

Adapts to Different Document Types

Works well for:

- research papers
- reports
- legal documents
- manuals
- blog articles

Where semantic sections vary in size. Fixed chunking cannot adapt.

Lower Redundancy Compared to Sliding Windows

Sliding window chunking repeats tokens.

Example:

Chunk1: tokens 1–300
Chunk2: tokens 250–550

This creates **30–40% redundancy**. Semantic chunking avoids unnecessary duplication.

Semantic chunking performs best when:

- documents are **long and concept-heavy**
- sections are **not uniform**
- LLM reasoning is important

Examples:

- research papers
- financial reports
- technical documentation
- legal texts

Comparison with the other chunking strategies:

Strategy	**Strength**	**Weakness**
Fixed token chunking	Simple and fast	Splits concepts
Sliding Window	Preserves continuity	High redundancy
Markdown structural	Works well for docs with headings	Not generalizable
Parent-Child chunking	Best for hierarchical retrieval	Requires dual index logic
Agentic chunking	Highest semantic quality	Expensive (LLM calls)
Recursive Splitting	Deterministic fast and predictable	Purely syntactic
Semantic chunking	Best semantic coherence	Embedding cost during ingestion

Summary

The best alternative to parent-child chunking is **semantic chunking**, because it:

- preserves meaning
- improves retrieval relevance

- adapts to document structure
- reduces redundant chunks
- improves LLM reasoning

However, it trades off **higher ingestion cost and slower indexing**.